Quadrature Down Converter

Anish Toshniwal
2024102009

Vedant Zope
2024102003

Kavya Pandey
2024102001

.

***Abstract*—A Quadrature Down Converter is a device that can convert a signal with high frequency into a corresponding signal with lower frequency. This device finds its use in Radio Frequency and communication systems. It can be used to reduce the frequencies of signals. In this project we learnt to make an oscillator, mixer and a Low Pass Filter and then use them to construct a Quadrature Down Converter which can reduce the frequency of the signals. We have used LTSpice software to design and implement our circuit.**

I. Introduction

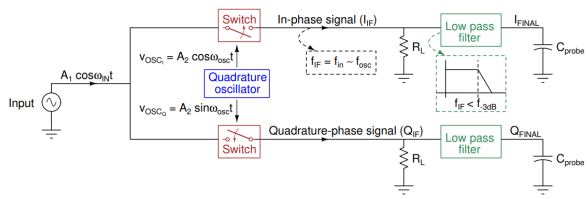

A quadrature down converter is a device used to shift a high-frequency signal to a lower frequency. It's commonly used in RF and communication systems. Since electronic circuits are generally more efficient and cost-effective at lower frequencies, these converters are widely adopted to bring down signal frequencies. This also leads to a reduction in bandwidth, which is particularly beneficial in scenarios where bandwidth is a limited resource. Additionally, quadrature down converters play a key role in modulation and demodulation techniques like Quadrature Amplitude Modulation (QAM), Phase Shift Keying (PSK), etc. The design and operation of such a device can be understood by dividing it into three main sections or modules:

1) Mixer
2) Low Pass Filter
3) Oscillator

II. Modules

A. Mixer

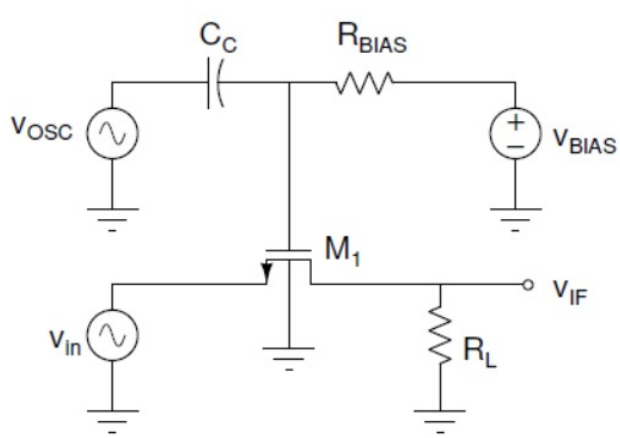

Mixers are used to convert signals from one frequency to another, in this case for better transmission of signals over a long distance. Multiplication in the time domain causes convolution in the frequency domain, so to shift the frequency we multiply our input signal with a sinusoidal signal that has a frequency f_{osc} that we choose such that we get an output frequency $f_o = f_{in} \pm f_{osc}$.

Design:

To implement a mixer, we will be using a MOSFET and operating it in it's triode region to obtain a drain current I_D as given below:

$$I_D = \frac{1}{2}\mu_n C_{ox}\frac{W}{L}[2(V_{GS} - V_T)V_{DS} - V_{DS}^2] \tag{1}$$

where $\frac{1}{2}\mu_n C_{ox}\frac{W}{L}$ are parameters and V_T is the threshold voltage of the MOSFET. When $V_{DS} << 2(V_{GS} - V_T)$, this equation can be approximated as:

$$I_D = \mu_n C_{ox}\frac{W}{L}(V_{GS} - V_T)V_{DS} \tag{2}$$

Let us take $K = \mu_n C_{ox}\frac{W}{L}$, $V_{GS} = V_{osc} + V_{bias}$, where $V_{bias} = V_T$ and $V_{DS} = V_{in}$. Our equation then becomes:

$$I_D = KV_{osc}V_{in} \tag{3}$$

This gives us our multiplication in the time domain. If we apply a resistor $R_L = \frac{1}{K}$ at the drain of the MOSFET, our output voltage V_o becomes:

$$V_o = V_{osc}V_{in} \tag{4}$$

Let us take $V_{osc} = A_1 cos\omega_{osc}t$ and $V_{in} = A_2 cos\omega_{in}t$. We get the following equation:

$$V_o = \frac{A_1 A_2}{2}[cos(\omega_{osc} + \omega_{in})t + cos(\omega_{osc} - \omega_{in})t] \tag{5}$$

Thus giving us our output frequency $f_o = f_{in} \pm fosc$.

Our design of the mixer (Fig. 2) implements the above equations to generate the output frequency $f_o = f_{in} \pm fosc$. The V_{bias} is set greater than V_T, . We have a coupling capacitor $C_c = 30pF$ in series with the oscillator so that the operating point of the MOSFET remains undisturbed. There is also a resistor R_{bias} in series with the bias voltage source, set to a high value $50k\Omega$ so that there is negligible current from the voltage source.

B. Low Pass Filter

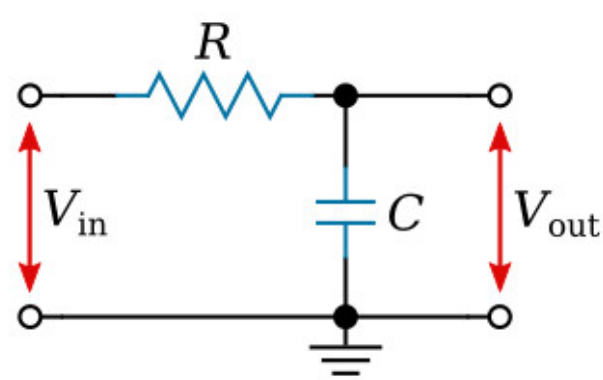

Fig. 1. LPF

A low pass filter is a simple RC Circuit that attenuates the amplitude of all the frequencies higher than the cut-off frequencies. We have used this to filter out all the signals that has frequencies above $fin - fosc$ in. Here, we have used two RC filters because we wanted a higher attenuation for signals above the desired frequency.

Derivation:
Impedance across the capacitor is given by:

$$Z_C = \frac{1}{j\omega C}$$

Using the voltage divider principle:

$$V_{\text{out}} = \frac{\frac{1}{j\omega C}}{\frac{1}{j\omega C} + R} \cdot V_{\text{in}}$$

$$\Rightarrow V_{\text{out}} = \frac{1}{1 + j\omega RC} \cdot V_{\text{in}}$$

We get the cutoff frequency as:

$$f_C = \frac{1}{2\pi RC}$$

It can be observed that $V_{\text{out}} \to 0$ for high-frequency signals. Attenuation occurs at all frequencies, but the extent of attenuation varies. For low frequencies, attenuation is minimal, whereas for high frequencies, attenuation increases significantly such that the output amplitude tends toward zero.

C. Oscillator

An oscillator is a circuit that generates an oscillating wave. In our use case, we are using an oscillator circuit to generate a sine wave and a cos wave which can be mixed with the input signal. The specifications of the oscillating wave that we are building are 1 Vpp Amplitude and 100kHz frequency.

There are many ways to build an oscillating circuit such as a quadrature oscillator, Wein Bridge Oscillator etc. We are using the Bubba Oscillator here in our circuit.

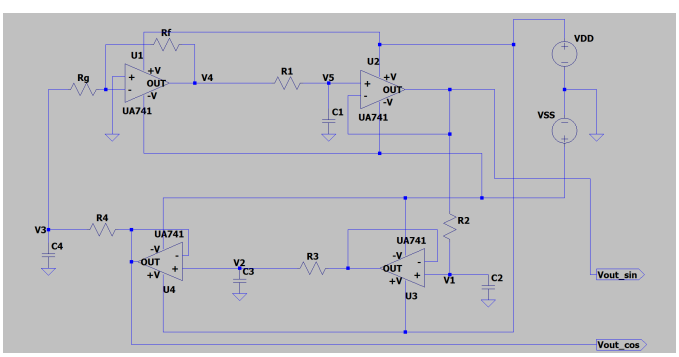

Fig. 2.

The "Bubba" oscillator is a phase-shift oscillator that utilizes four op-amp RC networks in series. Each op-amp provides a $45°$ phase shift, for a total of $180°$ phase shift through the entire circuit. The circuit is able to provide a stable sine wave at the specified frequency and, if desired, the corresponding cosine wave.

$$V_2 = \left(\frac{\frac{1}{sC_3}}{\frac{1}{sC_3} + R_3} \right) V_1$$

$$\Rightarrow \frac{V_2}{V_1} = \frac{1}{1 + sC_3R_3}$$

Similarly,

$$\frac{V_3}{V_2} = \frac{1}{1 + sC_4R_4}$$

$$\frac{V_4}{V_3} = \frac{-R_f}{R_g} \, [InvertingAmplifier]$$

$$\frac{V_5}{V_4} = \left(\frac{1}{1 + sC_1R_1} \right)$$

$$\frac{V_1}{V_5} = \left(\frac{1}{1 + sC_2R_2} \right)$$

Multiplying all the 5 equations,
Assuming, $R_1C_1 = R_2C_2 = R_3C_3 = R_4C_4 = RC$:

$$\frac{V_2}{V_1} \times \frac{V_3}{V_2} \times \frac{V_4}{V_3} \times \frac{V_5}{V_4} \times \frac{V_1}{V_5} = -\frac{R_f}{R_g} \left[\frac{1}{1 + sRC} \right]^4$$

$$\Rightarrow 1 = -\frac{R_f}{R_g} \left[\frac{1}{1 + sRC} \right]^4$$

$$\Rightarrow \frac{-R_f}{R_g} = (1 + sRC)^4$$

Substituting $s = j\omega$:

$$-\frac{R_f}{R_g} = (1 + j\omega RC)^4$$

Phase shift in the loop $= 0$ or 2π.
Since the inverting amplifier provides a phase shift of π, the RC components must collectively provide phase shift of π. Since all RC components are equivalent, each RC component provides a phase shift of $\pi/4$.

$$\Rightarrow \angle\phi = \tan^{-1}(1 + jR(\omega)) = \pi/4$$

$$\Rightarrow \frac{RC\omega}{1} = 1$$

$$\Rightarrow \omega = \frac{1}{RC}$$

Substituting this value in the previous equation:

$$-\frac{R_f}{R_g} = (1 + j)^4$$

$$\Rightarrow \left| \frac{R_f}{R_g} \right| = |1 + j|^4 = (\sqrt{2})^4 = 4$$

$$\Rightarrow \frac{R_f}{R_g} = 4$$

$$f_0 = \frac{1}{2\pi RC}$$

where f_0 is the frequency of the sinusoids obtained.
Ideally, only one op-amp acts as an amplifier that has a gain of magnitude 4. The other three op-amps act as buffers (with

gain = 1) between each RC component responsible for the signal's 45° phase shift. This ensures that the total loop gain is 1.

Amplitude:
The amplitude of the sine wave is greater than the amplitude of the cosine wave. This is due to voltage attenuation caused by the resistors and capacitors between the two output terminals. To address this, we added another non-inverting amplifier to increase the amplitude of the cosine wave in order to match the amplitudes. However, the frequency of both the waves remains same.

III. LTSpice Circuits

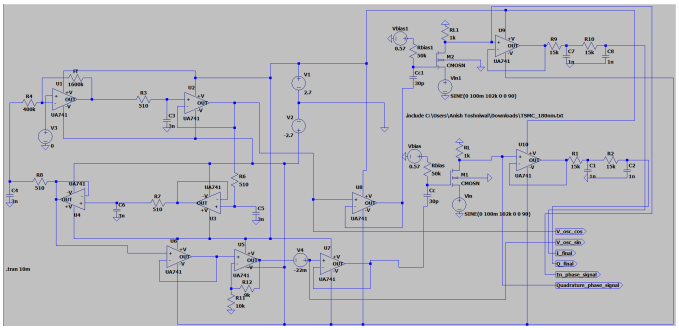

Fig. 3.

The above image represents our full circuit of the designed Quadrature Down Converter.

A. Oscillator

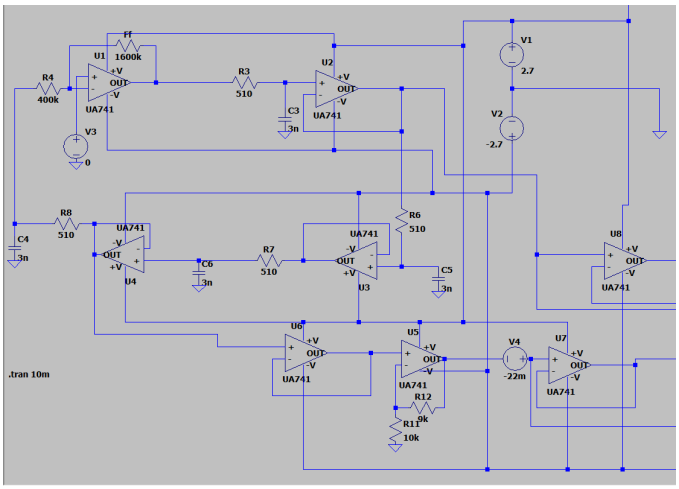

Fig. 4.

Figure 6 above shows the values that we have used for our oscillator. Comparing this with previous figure 4, we can see that $R_f = 1600k$ and $R_g = 400k$. The ratio $R_2/R_1 = 4$ which is required for oscillations. Using $f_o = 1/2 * \pi RC$, we wanted the value of f_0 to be 100kHz. Thus we chose the values $C = 3nF$ and $R = 510\Omega$, here by calculation we can see that f_o is slightly greater than 100kHz but due to the non-ideality of UA741 we tampered these values.

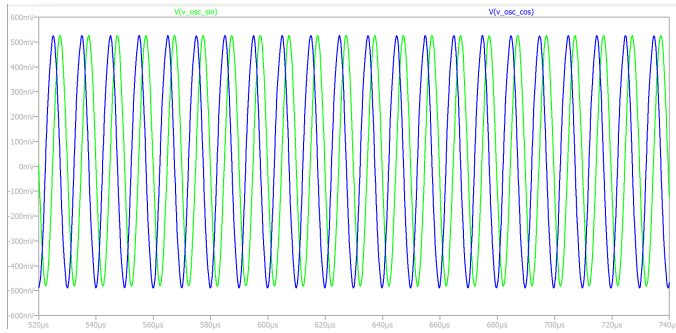

Fig. 5. V_{osc}

This shows the quadrature phase waves generated by our Bubba oscillator. The amplitude of the cos wave generated is around 1.015 V and the amplitude of the sin wave is around 1.008V. The phase difference between the two waves is around 90 degrees and the frequency is 100.2 kHz.

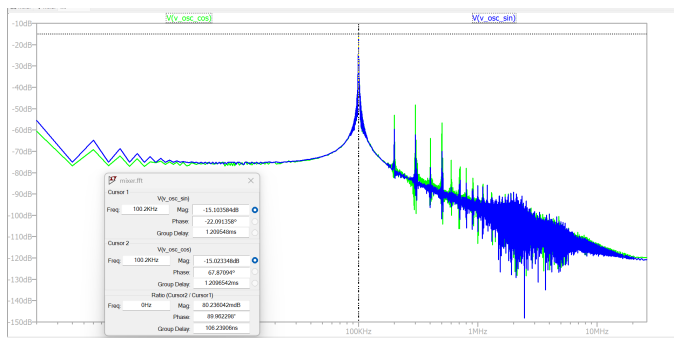

Fig. 6. FFT of V_{osc}

B. Mixer

The circuit made in LTSpice is given in Fig. 9. We set V_{IN} as a sine wave with amplitude 100mV and V_{osc} as a sine wave with amplitude 100mV and frequency 100kHz.

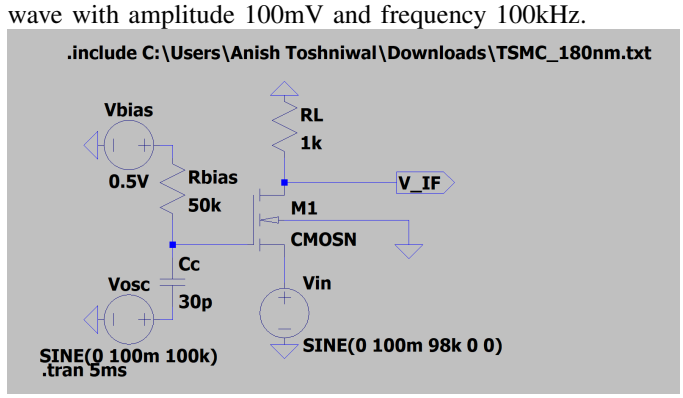

Fig. 7.

We take $R_{BIAS} = 50k$ and $C_C = 30pF$
V_{BIAS} is chosen so as to ensure that the MOSFET remains in linear/triode region.
Now we show transient plots of v_{in}, v_{IF} for f_{IN} = {95kHz, 98 kHz, 99 kHz, 101 kHz, 102kHz, 105 kHz}. Also including the FFT plots of v_{IF}.

Plots:

In the plots, the green curve is v_{IF} and blue curve is $v_{in}/50$, and the pink plot below is the FFT of v_{IF}

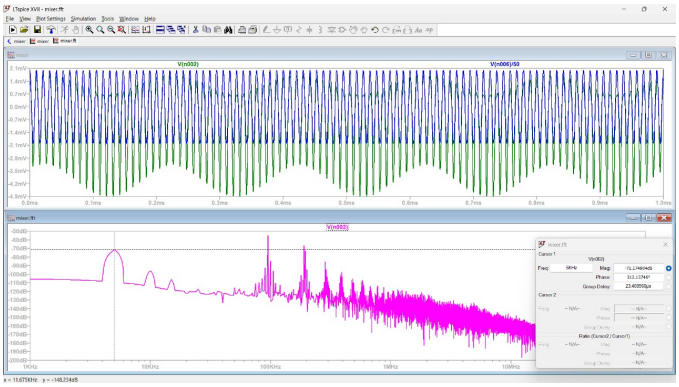

Fig. 8. 95kHz

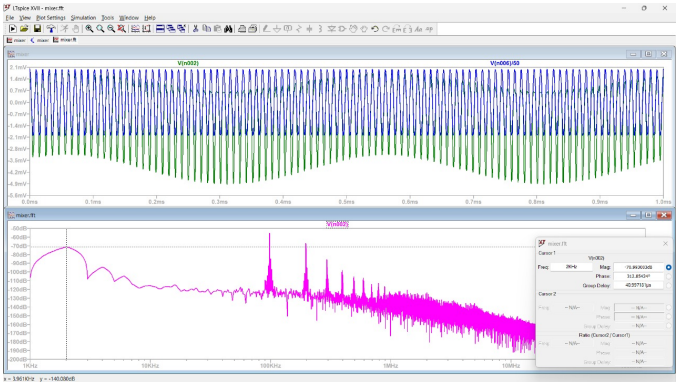

Fig. 9. 98kHz

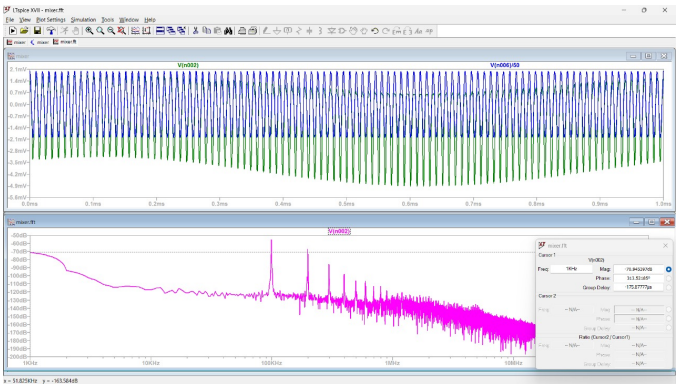

Fig. 10. 99kHz

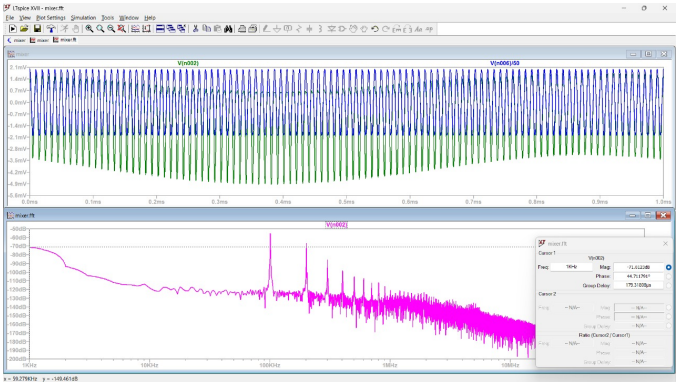

Fig. 11. 101kHz

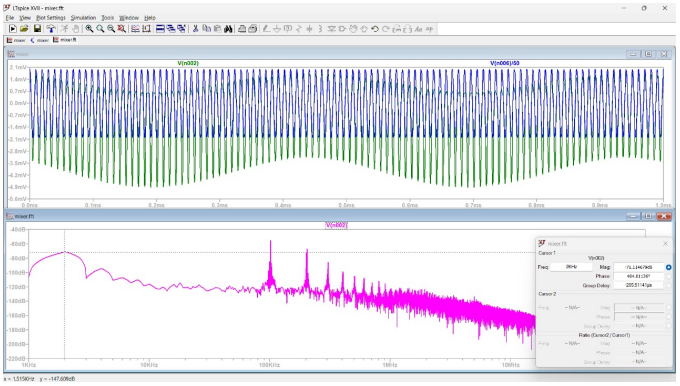

Fig. 12. 102kHz

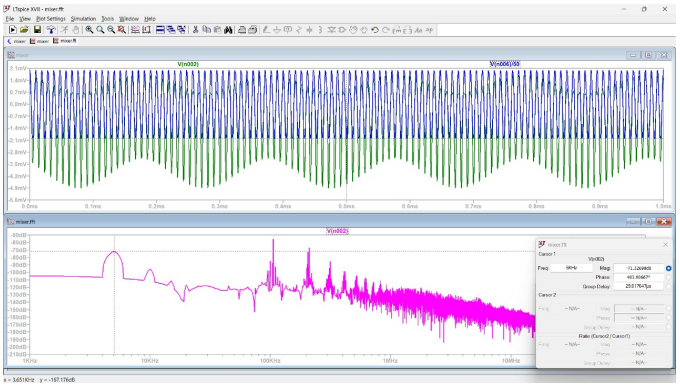

Fig. 13. 105kHz

C. Low Pass Filter

a) Using $R = 8\,\mathrm{k\Omega}$, $C = 10\,\mathrm{nF}$

$$f_{-3\mathrm{dB}} = \frac{1}{2\pi RC} = \frac{1}{2\pi \times 8 \times 10^3 \times 10 \times 10^{-9}} = 1989.43\,\mathrm{Hz}$$

Approximately $2\,\mathrm{kHz}$

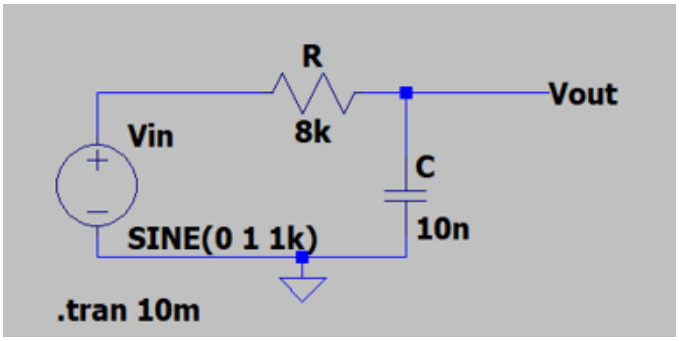

Fig. 14.

b) Frequency Response(AC Analysis):

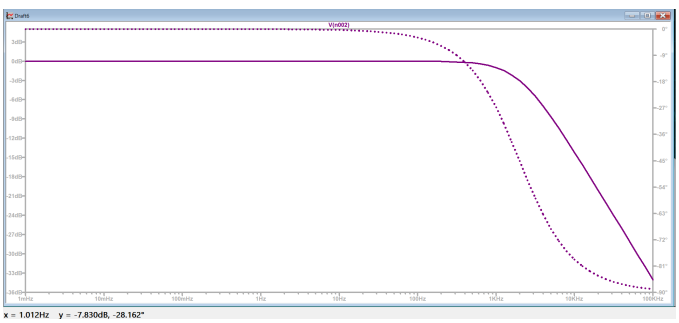

Fig. 15.

c) Transient Response:

for f=1kHz:

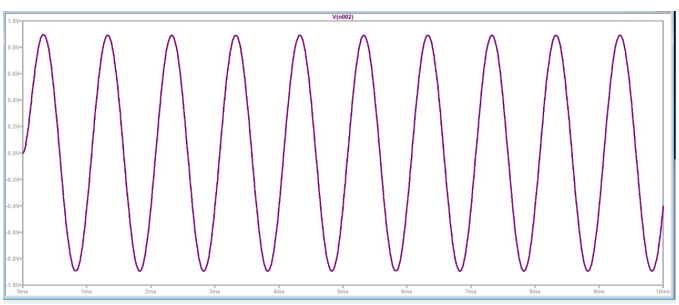

Fig. 16.

Amplitude=0.9V

for f=10kHz:

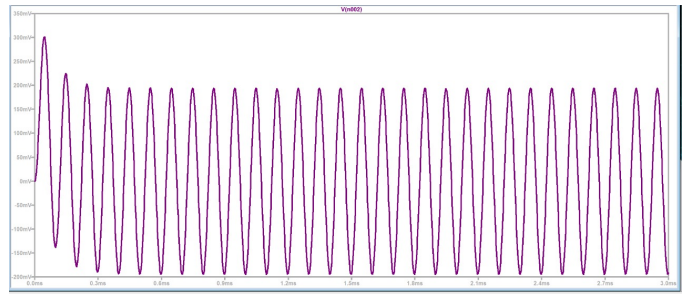

Fig. 17.

Amplitude=200mV

d) Mixer and LPF together:

Circuit:

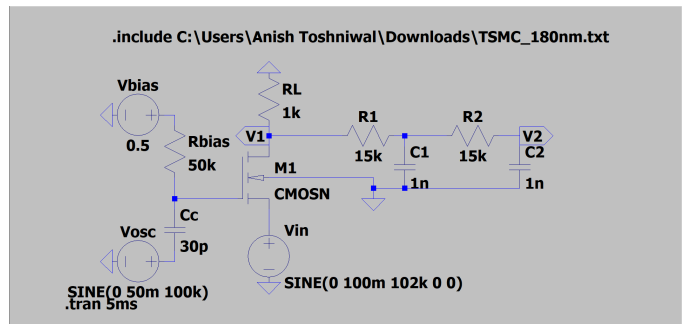

Fig. 18.

Transient plot:

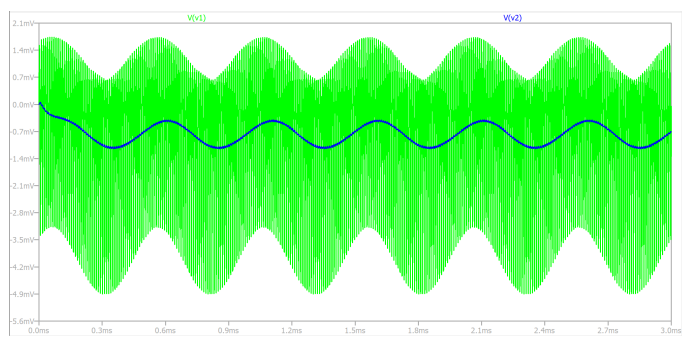

Fig. 19.

FFt:

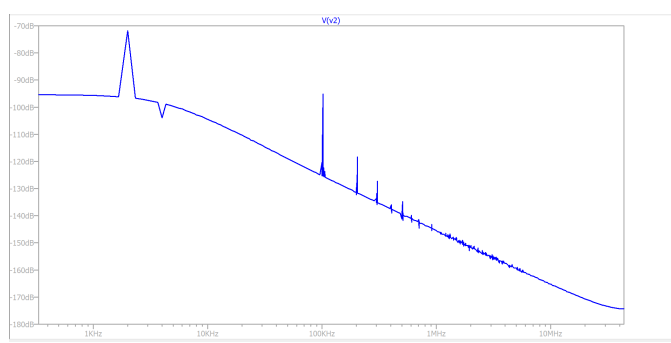

Fig. 20.

From the FFT of V2 we can see that the frequency of the out of low pass filter is 2kHz.

D. Complete circuit Design

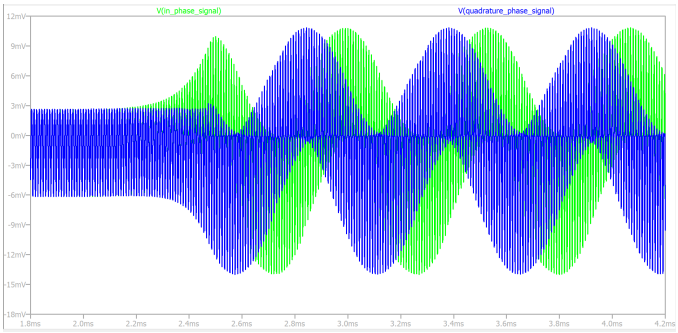

Fig. 21. Transient Response of Quadrature Phase and In phase Signals

This is the output generated by the mixer circuit when it mixes the Oscillator generated sinusoidal signals along with a given sinusoidal input signal of frequency 102 kHz.
Here are the FFTs of the In-Phase and Quadrature Phase Signals:

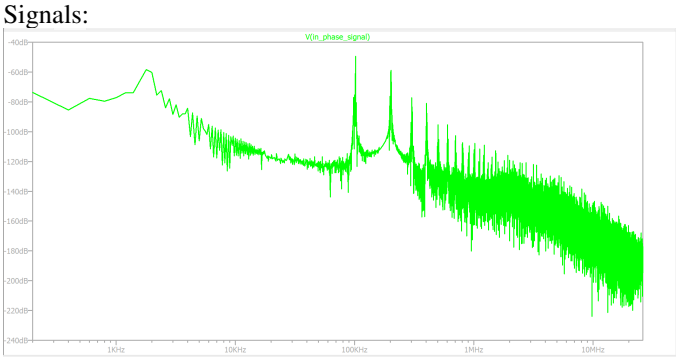

Fig. 22. In-Phase

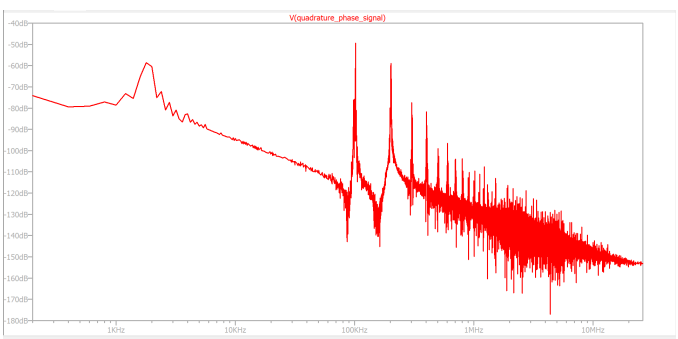

Fig. 23. Quadrature-Phase

The signal received from the output of the mixer after mixing with the generated waveform and the input waveform. At this point, this signal has major content of 4 frequencies. They are:
f_o
f_{in}
$f_{in} + f_{osc}$
$f_{in} - f_{osc}$
This signal will be passed through a low pass filter to eliminate all other frequencies other than $f_{in} - f_{osc}$
.

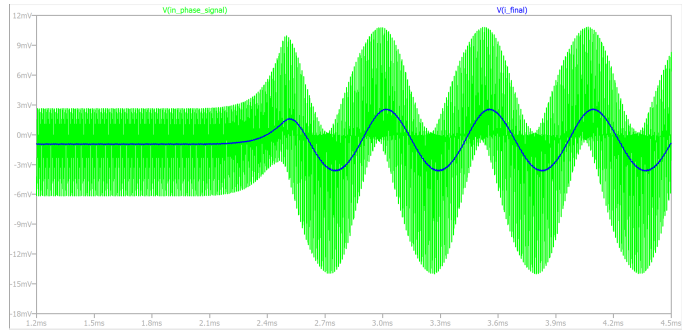

Fig. 24. In-Phase vs I-Final

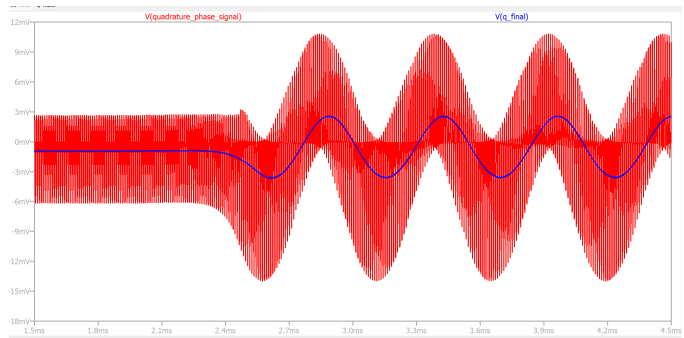

Fig. 25. Quadrature-Phase vs Q-Final

The transient response of QF_{final} and IF_{final} show that we get sinusoidal waves with frequency almost equal to $f_{in} - f_{osc}$
which can be seen in the below FFT to the both signals. The two down converted waves have an almost 90 degree phase shift making them quadrature signals.

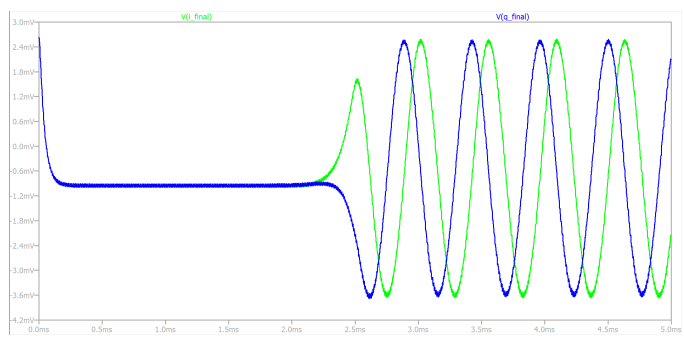

Fig. 26. IF-Final vs QF-Final

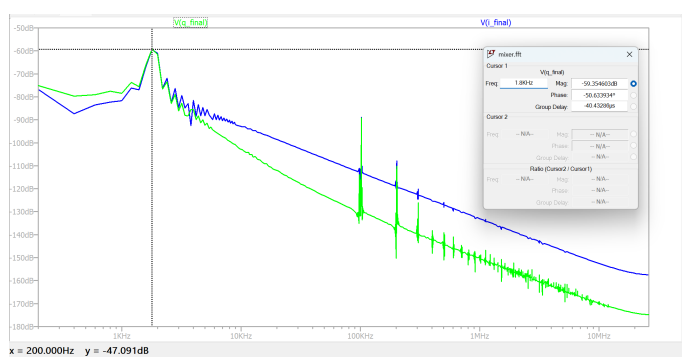

Fig. 27. FFT of IF-Final and QF-Final

From the FFTs we can see that the final signals generated have major frequency content of only $f_{in} - f_{osc}$. The other frequencies that the were present in the signal from the mixer were attenuated quite a lot in magnitude. Hence, giving us a smooth sine curve.

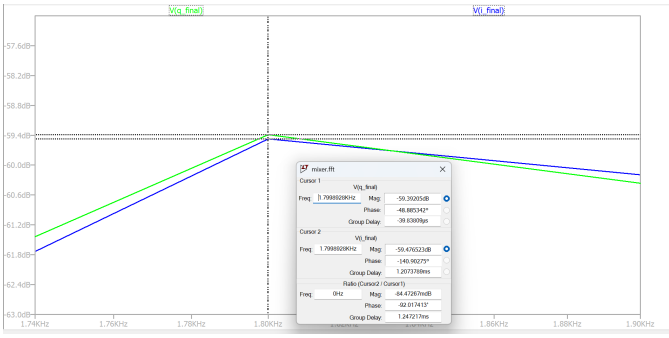

Fig. 28. Phase difference

The phase difference that we observed was around 92 degrees which is within the tolerance of error.

IV. Conclusion

In this project we mainly learnt about two things - oscillator and mixer circuit. Upon combining the two we imlemente Quadrature Down Convertor which can reduce frequencies of Signals. Down conversion is a very important tool used by engineers to design more efficient and reliable circuits for communication and RF.

V. References

1) **Design of Opamp Sine Wave Oscillators**, *Ron Mancini*.
2) **A Simple Wide-Band Sine Wave Quadrature Oscillator**, *Ralph Holzel*.
3) **Fundamentals of Microelectronics**, *Behzad Razavi*.
4) **RF Electronics**, *Behzad Razavi*.
5) **Microelectronic Circuits**, *Adel S. Sedra and Kenneth C. Smith*.
6) **The Design of CMOS Radio-Frequency Integrated Circuits**, *Thomas H. Lee*.
7) **simplecircuitdiagram.com**.
8) **Basic Electronic Tutorial**.
9) **Wikipedia**, the free encyclopedia.
10) **eng.libretexts.org**.
11) **Engineering Prof** (YouTube).